Zoomlion's crane world

ZOOMLION

Add: No.613 of the 3rd District Furong Middle Road, Changsha, Hunan,China
Tel: +86-731-5667238
Fax: +86-731-5682997
E-mail: hotline-crane@zoomlion.com
PC: 410007

Copyright by ZOOMLION, 2009. We reserve the right to make improvements and changes to the illustration and technical parameters without notice. If there are differences between illustration and product, please refer to the product.

www.zoomlion.com

2009.4

New Generation of V-series

ZOOMLION

QY30V532.1

Full Hydraulic Truck Crane

SISTERMI
Movimentação e Içamento de Cargas

ZOOMLION

Our motives are for more perfect!
The new generation of QY30V truck crane comes into the market splendidly.

Zoomlion full hydraulic truck crane QY30V, which is of super lifting capacity, is designed with the backing of Zoomlion engineers' half century's designing and manufacturing experience. It is a high-tech and high-performance truck crane harmoniously blended of the advanced international technology and advanced designing concepts.

SISTERMI
Movimentação e Içamento de Cargas

Our changing is just for you! Systems are generally upgraded.

Pilot operated proportional controls, improved power source (triple pumps improved to quadruple pumps), high-efficiency and low-consumption Weichai engine and the exclusive technology of "common-rail control system" …

Large amount of new concepts, new materials, new processes, new technologies and human-oriented designs have been applied to the new generation of QY30V, which makes its moulding more artistic and its performance parameters, such as lifting height, boom length, working speed, lifting capacity etc., achieve the advanced international level.

Super-lifting capacity, especially the lifting capacity of middle-and-full length boom has been greatly improved.

A. Hexagon section boom made from low-alloy, high-strength structural steel offers crane strong bearing capacity;

B. Large arc lower slide block (having possessed a national patent) with automatic pressure-compensated function can be adjusted conveniently and provide boom with strong distortion-resistant ability;

C. H-type outriggers with large span ensure steady operation.

Slewing control technology overall upgraded

The slewing system and its related systems have all improved and upgraded, which can provide you more stable slewing and more accurate slewing brake. All that ensures the crane can position accurately during slewing and brake, so that its controllable operation is achieved.

SISTERMI
Movimentação e Içamento de Cargas

Human–oriented, enjoy the operation of the crane

Advantages for standard maintenance

A. International popular front cover plate

The front cover plate of driver's cab can be pulled upwards, so as to make the maintenance and repair work for chassis components convenient;

B. Guard rail

The hydraulic oil tank is protected by guard rails, so its safety and appearance are all greatly improved;

C. Human–oriented designed oil marks

The oil marks are fitted at the outside of the oil tank. The upper one is convenient for oil level observing and the lower one can display the oil temperature.

Comfortable working space

Modern, comfortable and new V–series driver's cab and operator's cab of convincing design and large space;

The arrangement of the control elements according to ergonomical aspects for safe and convenient handling during operation;

All–steel structure; luxury equipment, safety glass (20mm, top glass), modern inner design, A/C and heater (optional); convenient and comfortable defogging, defrosting and footwell air supply function; adjustable spring–cushioned seat with two rails suitable for any operator.

SISTERMI
Movimentação e Içamento de Cargas

ZOOMLION QY30V532.1

ZLJ5322JQZ30V

New Generation of V-series Truck Crane

Driver's cab

- Spacious space, wide vision
- Adjustable damping seat, UV-cut reinforced curtain, radio
- High tightness, waterproof and sound insulation

Operator's cab

- Roomy space, wide vision, high tightness, waterproof and sound insulation
- Chassis engine controls
- High quality LCD monitor and shockproof pressure gauge with the function of working range limit and pressure detection.

We reserve the right to change the design and specifications without notice

Technical parameters

Working performance	Max. rated lifting capacity	kg	30000
	Max. lifting torque of basic boom	kN·m	1132
	Max. lifting torque of Max. length boom	kN·m	588
	Max. lifting height of basic boom	m	11.1
	Max. lifting height of boom	m	40.5 The specifications do not include deflection of boom and jib.
	Max. lifting height of jib	m	48.5 The specifications do not include deflection of boom and jib.
Working speeds	Max. hoist rope speed (Main winch)	m/min	120 At 4th layer
	Max. hoist rope speed (Auxiliary winch)	m/min	70 At 2nd layer
	Boom derricking time	s	40
	Boom extending time	s	80
	Slewing speed	r/min	0 ~ 2.2
Traveling parameters	Max. traveling speed	km/h	78
	Max. gradeability	%	37
	Min. turning diameter	m	≤ 22
	Min. ground clearance	mm	220
	Limits for exhaust pollutants and smoke		Conform to related standards. Conform to GB 847-2025 GB 17691-2025 National Stage III
	Oil consumption per hundred kilometers	L	45
Weights	Self weight in traveling condition	kg	32000
	Complete vehicle kerb mass	kg	31870
	Axle load (Front)	kg	7000
	Axle load (Rear)	kg	25000
Dimensions	Overall dimensions(L × W × H)	mm	12900 × 2500 × 3465
	Longitudinal distance between outriggers	m	5.36
	Transversal distance between outriggers	m	6.1
	Boom length	m	10.6 ~ 40
	Boom angle	°	-2 ~ 80
	Jib length	m	8
	Offset	°	0 , 30
Chassis	Model		ZLJ5325
	Code		ZLJ5325V3
	Type		II
	Engine model		WP10.270
	Rated power	kW/r/min	199/2200
	Max. torque	N·m/r/min	1100/1300 ~ 1600
	Manufacturer		Zoomlion

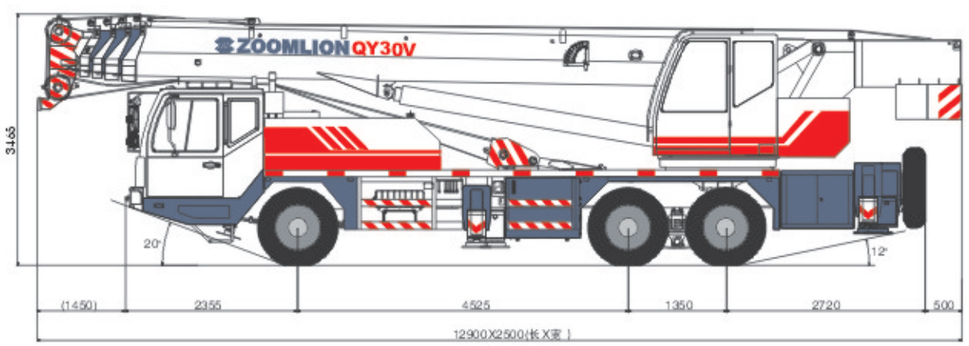

Load rating chart

Unit:kg

Working radius (m)	Boom (m)												
	Oil cylinder I and outriggers fully extended, over side and over rear							Oil cylinder I half extended and outriggers fully extended, over side and over rear					
	10.6	14.3	18.0	23.5	29.0	34.5	40.0	10.6	14.3	19.8	25.3	30.8	36.3
3.0	30000	27000	22000					30000	27000				
3.5	30000	27000	22000					30000	27000				
4.0	28000	26000	20000	16500				28000	26000	16500			
4.5	25000	24000	18500	15500				25000	24000	15500			
5.0	23000	22000	17000	14500				23000	22000	14500	11500		
5.5	21000	20500	15600	13500	11500			21000	20500	14000	11500		
6.0	18500	18500	14600	12500	10900			18500	18500	13500	11500		
6.5	16500	16500	13700	11800	10300			16500	16500	12800	11500	8200	
7.0	14600	14400	12800	11000	9700	8200		14600	14400	12000	11500	8200	
7.5	13000	12800	11900	10400	9200	7900		13000	12800	11200	11500	8100	
8.0	11600	11400	11100	9700	8800	7600		11600	11400	10700	11500	8000	6300
9.0		9300	9100	8700	8000	7000	6300		9300	9700	10000	7400	6300
10.0		7600	7450	7900	7200	6400	5600		7600	8500	8800	6700	5750
11.0		6400	6250	6900	6600	5850	5200		6400	7200	7500	6300	5300
12.0			5150	5850	6100	5400	4800			6200	6300	5700	4900
13.0			4300	4950	5350	5000	4500			5200	5600	5400	4600
14.0			3600	4250	4600	4600	4200			4600	4900	5000	4250
15.0				3650	4050	4300	4000			3900	4250	4600	4000
16.0				3100	3500	3700	3700			3400	3700	4000	3700
18.0				2300	2700	2950	2950				2900	3000	3100
20.0					2050	2300	2300				2200	2350	2500
22.0					1550	1800	1800				1700	1800	1900
24.0					1150	1300	1400					1400	1450
26.0						900	1050					1050	1150
28.0						650	750					750	900
30.0							550						650
I	0	3.7	7.4	7.4	7.4	7.4	7.4	0	3.7	3.7	3.7	3.7	3.7
II	0	0	0	5.5	11.0	16.5	22.0	0	0	5.5	11.0	16.5	22.0
Reevings	8	6	6	4	4	3	3	8	6	4	4	3	3
Hook	30t main hook							30t main hook					

SISTERMI
Movimentação e Içamento de Cargas

Working radius (m)	Boom (m)					Boom (m)						
	Oil cylinder I fully retracted and outriggers fully extended, over side and over rear					Oil cylinder I fully extended and outriggers half extended, over side and over rear						
	10.6	16.1	21.6	27.1	32.6	10.6	14.3	18.0	23.5	29.0	34.5	40.0
3.0	30000	16500				30000	27000	21000				
3.5	30000	16500				26000	26000	19000				
4.0	28000	16500	11500			23000	22000	18000	15000			
4.5	25000	16500	11500			18000	18000	16000	14000			
5.0	23000	16500	11500			16000	16000	15000	13000			
5.5	21000	16000	11500	8200		13000	13000	12500	12000	10500		
6.0	18500	15800	11500	8200		11000	11000	10500	11000	10000		
6.5	16500	15300	11500	8200		9500	9000	9000	9500	9200		
7.0	14600	15000	11500	7500		8200	8000	7500	8500	8600	8000	
7.5	13000	13500	10800	7300	6300	6800	6600	6500	7200	7500	7300	
8.0	11600	12000	10000	7000	6300	6200	4500	5500	6500	7000	7000	
9.0		10000	9000	6300	5700		3500	4500	5000	5500	6000	6000
10.0		8500	8500	5800	5100		2800	3500	4000	4500	4800	5000
11.0		7200	7500	5200	4700			2500	3200	3600	4000	4200
12.0		6200	6300	4900	4250			2000	2500	3000	3300	3500
13.0		5200	5600	4500	4000			1500	2000	2500	2600	3000
14.0		4600	4900	4100	3700			1100	1700	2000	2300	2500
15.0			4250	3800	3200				1300	1600	1800	2100
16.0			3700	3600	3000				1000	1300	1600	1800
18.0			2900	3100	2600					800	1100	1200
20.0				2500	2300						700	900
22.0				2000	2000							600
24.0				1600	1700							
26.0					1300							
28.0					1100							
30.0												
I	0	0	0	0	0	0	3.7	7.4	7.4	7.4	7.4	7.4
II	0	5.5	11.0	16.5	22.0	0	0	0	5.5	11.0	16.5	22.3
Reevings	8	6	4	3	3	8	6	6	4	4	3	3
Hook	30t main hook					30t main hook						

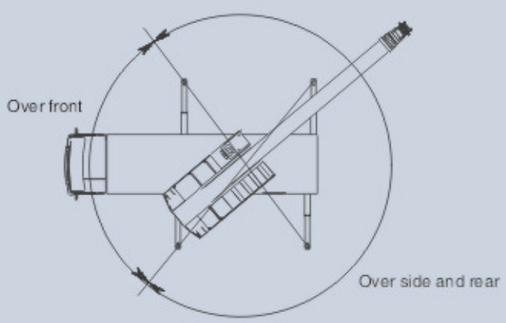

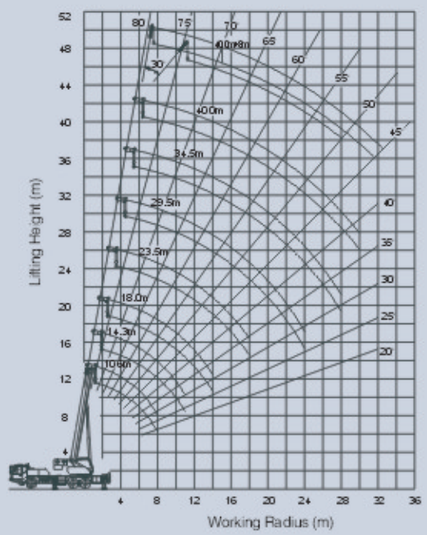

Working radius (m)	Boom (m)						Boom (m)					Boom angle (°)	Boom + jib 39.2+8 (m)			
	Oil cylinder I and outriggers half extended, over side and over rear						Oil cylinder I fully retracted and outriggers half extended, over side and over rear						Outriggers fully extended			
													Offset0°		Offset30°	
	10.6	14.3	19.8	25.3	30.8	36.3	10.6	16.1	21.6	27.1	32.6		Over side and rear	Over front	Over side and rear	Over front
3.0	30000	27000					30000	16500				80	3000	3000	1500	1500
3.5	26000	26000					26000	16500				78	3000	3000	1500	1500
4.0	23000	22000	16500				23000	16500	11500			76	3000	3000	1500	1500
4.5	18000	18000	15500				18000	16500	11500			74	2900	2750	1500	1500
5.0	16000	16000	14500	11500			16000	16500	11500			72	2800	2250	1450	1450
5.5	13000	13000	13500	11500			13000	13800	11500	8200		70	2650	1800	1400	1400
6.0	11000	11000	11500	11500			11000	11300	11500	8200		68	2500	1450	1350	1200
6.5	9500	9000	10000	10500	8200		9500	10000	10300	8000		66	2250	1150	1300	980
7.0	8200	8000	8500	9200	8200		8200	8300	9000	7400		64	1900	900	1270	760
7.5	6800	6600	7200	7600	7800		6800	7400	7800	7000	6300	62	1650	660	1240	580
8.0	6200	4500	6500	7100	7400	6300	6200	6500	6800	6700	6100	60	1400	450	1210	380
9.0		3500	5200	5700	6000	6000		5000	5500	6000	5300	58	1200		1080	
10.0		2800	4200	4500	5000	5200		4000	4500	5000	4800	56	1030		930	
11.0			3500	3800	4100	4400		3600	3800	4200	4500	54	870		800	
12.0			2700	3100	3500	3700		3000	3000	3500	3800	52	730		650	
13.0			2300	2700	2900	3100		2500	2500	3000	3200	50	600		530	
14.0			1900	2100	2500	2700			2200	2500	2800	45	320			
15.0			1500	1800	2100	2300			1900	2100	2300					
16.0			1200	1500	1800	1900			1600	1800	2000					
18.0				1000	1200	1400			1000	1400	1500					
20.0				700	850	1000				900	1100					
22.0						700				700	800					
I	0	3.7	3.7	3.7	3.7	3.7	0	0	0	0	0					
II	0	0	5.5	11.0	16.5	22.0	0	5.5	11.0	16.5	22.0					
Reevings	8	6	4	4	3	3	8	6	4	3	3	Reevings	1			
Hook	30t main hook						30t main hook					Hook	30t main hook			

SISTERMI
Movimentação e Içamento de Cargas

SISTERMI
Movimentação e Içamento de Cargas

Você pode entrar em contato conosco através dos telefones

(27) **3398-1233**

(27) **99690-0505**

(27) **99817-8420**

e no e-mail

comercial@sistermi.com.br