1.TECHNICAL SPECIFICATIONS

1.1 Outline

1.1.1 Overall structure

Overall structure is as shown in Fig.1.1.

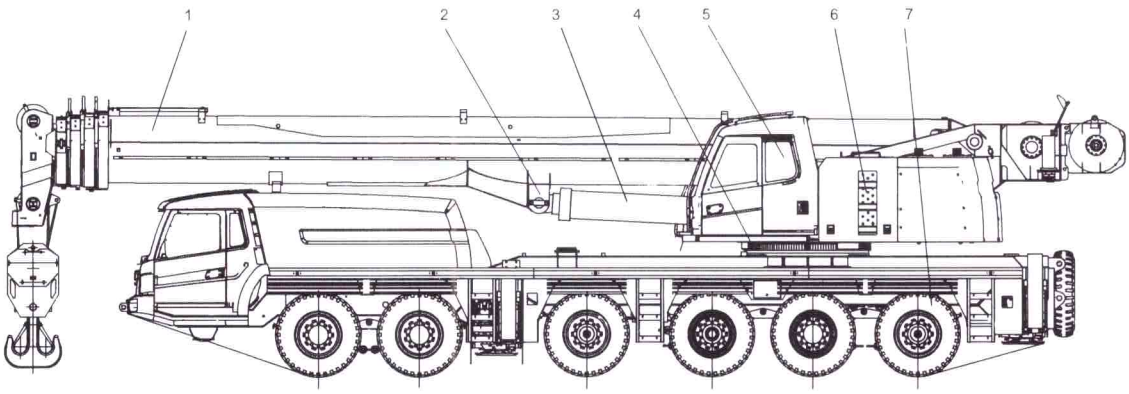

1. Boom system; 2. Electrical system; 3. Hydraulic system; 4. Swing table assembly; 5. Superstructure cab; 6. Superstructure power system; 7. Chassis

Fig. 1.1 Overall Structure of Complete Vehicle

1. Boom System

The boom system is composed of main boom, jib, telescopic mechanism and pulley block, etc.

2. Electrical System

The electrical system of superstructure mainly consists of moment limiter, overwinding protection mechanism of main & auxiliary hoisters, three-layer overrelaxing rope protection device, various control switches, indicator lamp, illuminating lamp, wiper, horn, air-conditioner and warm-air device, etc.

3. Hydraulic System

Main winch lifting, auxiliary winch lifting, luffing, telescoping and swing of hydraulic system of superstructure are mainly controlled by main valve group.

4. Swing table Assembly

Swing table assembly mainly covers swing table, hoister reducer, lifting and rising steel wire rope, main hook, auxiliary hook, swing bearing, swing motor and swing table lock pin, etc.

5. Superstructure cab

Superstructure cab is mainly made up of cab, control mechanism, control cabinet and superstructure air-conditioner, etc.

6. Superstructure Power System

The superstructure power system is mainly made up of systems of oil supply, air intake, exhaust, cooling and power output, etc.

7. Chassis

Chassis is mainly composed of truck body, transmission system, steering system, brake system, traveling system, chassis electrical system and undercarriage hydraulic system, etc.

SISTERMI
Movimentação e Içamento de Cargas

1.1.2 Overall dimensions and technical parameters

(1) Overall dimensions

The overall dimensions of STC1000 truck crane is as shown in Fig.1.2.

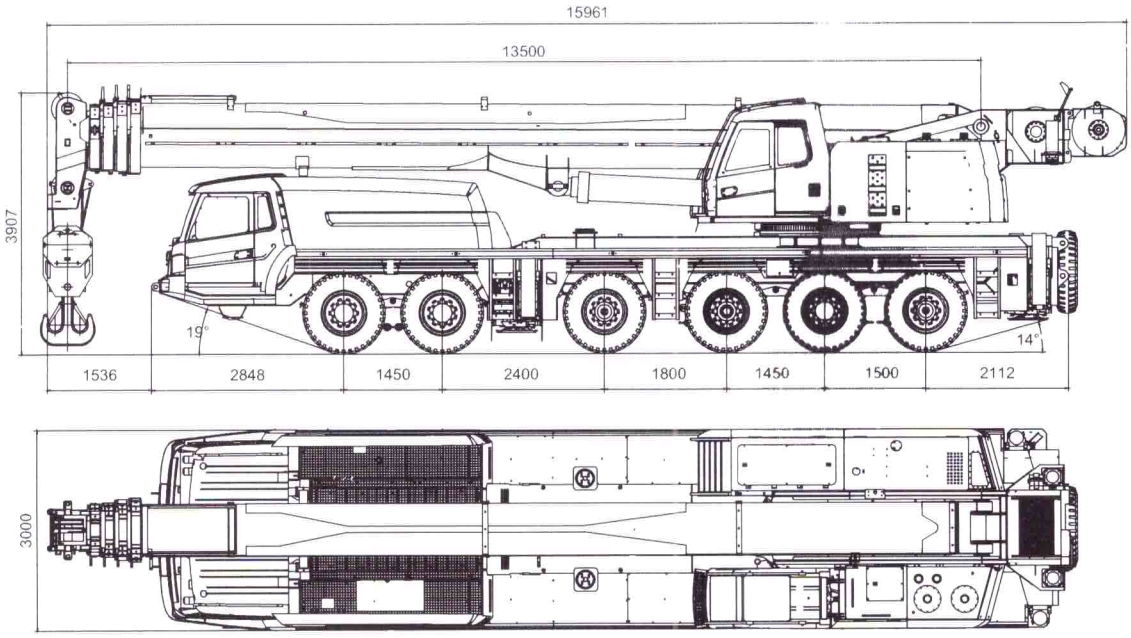

Fig. 1.2 Outline Drawing of Complete Machine

SISTERMI
Movimentação e Içamento de Cargas

(2) Technical Parameters

Refer to Table 1.1, 1.2 for technical parameters of STC1000 truck crane.

Table 1.1 Technical Parameters of STC1000 Truck Crane under Traveling State

Classification	Item		Unit	STC1000
Dimensions	Overall length		mm	15961
	Overall width		mm	3000
	Overall height		mm	3907
	Wheel base	Wheel base (first - second)	mm	1450
		Wheel base (second - third)	mm	2400
		Wheel base (third - fourth)	mm	1800
		Wheel base (fourth - fifth)	mm	1450
		Wheel base (fifth - sixth)	mm	1500
	Wheel track	Wheel track (first - second)	mm	2556
		Wheel track (third- sixth)	mm	2380
		Wheel track (fourth - fifth)	mm	2310
Weight	Gross weight under Traveling		kg	58000
	Axle load	Axle load(first, second, third)	kg	25500
		Axle load(fourth, fifth, sixth)	kg	32500
Power	Chassis Engine	Model		Benz OM502LA.III
		Rated power	kw/(r/min)	350/（1800）
		Rated torque	Nm/(r/min)	2300/（1100）
		Rated speed	r/min	1800
Traveling Parameters	Max. traveling speed		km/h	80
	Min. turning radius		m	12
	Min. ground clearance		mm	300
	Approach angle		°	19
	Departure angle		°	14
	Min. brake distance		m	10
	Max. gradeability		%	35
	Fuel consumption per 100km		L	60

SISTERMI
Movimentação e Içamento de Cargas

Table 1.2 Technical Parameters of STC1000 Truck Crane under Traveling State

Classification	Item		Unit	Parameter
Main Performance Parameters	Max. rated lifting capacity		t	100
	Min. reach		m	3
	Max. rated lifting moment	Base boom	kN·m	3528
		Fully-extended boom	kN·m	1881
	Length of boom	Base boom	m	13.5
		Fully-extended boom	m	52
		Fully-extended boom + jib	m	52+18
	Max. lifting height	Base boom	m	13.5
		Fully-extended boom	m	52
		Fully-extended boom + jib	m	70
	Luffing range of boom		°	-2 ~ 80
	Section number of boom			5
	Section type of boom			U
	Length of jib		m	10.7 ~ 18
	Installation angle of jib		°	0、15、30
	Engine of superstructure	Model		Benz OM906LA. E2/5
		Rated power	kw/(r/min)	150/（2200）
		Rated torque	N.m/(r/min)	750/（1200~1600）
		Rated running speed	r/min	2200
Working Speed Parameters	Max. lifting speed（no load、single rope）	Main winch	m/min	135
		Auxiliary winch	m/min	123
	Full extending time of boom		s	120
	Full lifting/descending time of boom		s	55/90
	Max. swing speed		r/min	1.93
	Full extending/retracting time of outrigger	Horizontal outrigger	s	25/15
		Vertical outrigger	s	35/25
	Outrigger span (longitudinal × horizontal)		m	7.56×7.6

SISTERMI
Movimentação e Içamento de Cargas

(3) Refer to Table 1.3 for lifting capacity of main boom

Table 1.3 Lifting Capacity of Main Boom of STC1000 Truck Crane

Unit: t

360°operation with fully-extended outrigger and 0.00t counterweight									
Radius(m)	Length of main boom (m)								
	13.5	18.4	23.2	28	32.8	37.6	42.4	47.2	52
3	100	90							
3.5	100	82	70						
4	91.8	75	65.6						
4.5	81.6	70	61.8	51.8					
5	71.5	64.9	58.4	48.9					
5.5	59.2	54.2	50.4	46.2	40.8				
6	50.1	46.2	43.3	42.5	38.6				
6.5	43.2	40	37.6	37.3	36.5	33.3			
7	37.7	35	33.1	33	32.6	31.8			
7.5	32.9	31	29.3	29.5	29.2	28.7			
8	28.7	27.6	26.2	26.6	26.4	26.1	25.5		
9	22.3	21.7	21.3	21.8	22	21.8	21.5	18.4	
10	17.7	17.2	17	18.2	18.5	18.5	18.3	17.5	
11	14.1	13.8	13.5	15.1	15.8	15.9	15.8	15.7	14
12		11.1	10.9	12.4	13.5	13.8	13.8	13.7	13.6
14		6.9	6.7	8.3	9.4	10.2	10.5	10.5	10.5
16		3.9	3.8	5.4	6.4	7.2	7.8	8.2	8.2
18			1.8	3.3	4.3	5.1	5.6	6.1	6.5
20				1.7	2.7	3.4	4	4.4	4.8
22					1.4	2.1	2.7	3.1	3.5
24						1.1	1.6	2.1	2.5
26								1.2	1.6
28									0.9
30									
32									
34									
36									
38									
40									
42									
Multiplying power	12	10	8	6	5	4	4	3	2
Min. elevation angle of main boom (°)	0	0	12	25	35	40	45	48	52

SISTERMI
Movimentação e Içamento de Cargas

360°operation with fully-extended outrigger and 8.52t counterweight									
Radius (m)	Length of main boom(m)								
	13.5	18.4	23.2	28	32.8	37.6	42.4	47.2	52
3	100	90							
3.5	100	82	70						
4	91.8	75	65.6						
4.5	81.6	70	61.8	51.8					
5	73.4	66	58.4	48.9					
5.5	66.8	62	55.3	46.2	40.8				
6	61.2	57.3	52.6	43.8	38.6				
6.5	53.6	49.8	47	41.6	36.7	33.3			
7	47	43.9	41.5	39.7	35	31.7			
7.5	41.7	39	37.1	37	33.3	30.3			
8	37.4	35	33.3	33.4	31.9	28.9	26.5		
9	30.1	28.7	27.4	27.8	27.7	27.4	24.3	18.6	
10	24.4	23.9	22.9	23.5	23.6	23.5	23.2	17.7	
11	19.9	19.6	19.4	20.1	20.3	20.4	20.2	16.8	14.5
12		16.3	16.1	17.3	17.7	17.8	17.7	15.9	13.7
14		11.4	11.3	12.8	13.7	13.9	14	14	12.7
16		7.9	7.9	9.4	10.4	11.1	11.2	11.3	11.7
18			5.4	6.8	7.8	8.6	9.1	9.2	10.6
20			3.4	4.9	5.9	6.6	7.1	7.6	7.7
22				3.3	4.3	5	5.6	6	6.4
24				2	3	3.7	4.3	4.7	5.1
26					2	2.7	3.2	3.6	4
28					1.1	1.8	2.3	2.7	3.1
30						1	1.5	2	2.3
32							0.9	1.3	1.7
34									1.1
36									
38									
40									
42									
Multiplying power	12	10	8	6	5	4	4	3	2
Min. elevation angle of main boom (°)	0	0	0	0	5	18	26	35	40

SISTERMI
Movimentação e Içamento de Cargas

360°operation with fully-extended outrigger and 14.48t counterweight									
Radius (m)	Length of main boom (m)								
	13.5	18.4	23.2	28	32.8	37.6	42.4	47.2	52
3	100	90							
3.5	100	82	70						
4	91.8	75	65.6						
4.5	81.6	70	61.8	51.8					
5	73.4	66	58.4	48.9					
5.5	66.8	62	55.3	46.2	40.8				
6	61.2	58.3	52.6	43.8	38.6				
6.5	56.5	53.8	50	41.6	36.7	33.3			
7	52.5	50	47.2	39.7	35	31.7			
7.5	47.7	44.7	42.5	37.9	33.3	30.3			
8	42.8	40.2	38.3	36.2	31.9	28.9	26.5		
9	35	33.1	31.6	31.9	29.2	26.6	24.3	18.6	
10	28.8	27.8	26.6	27.1	27.1	24.5	22.5	17.7	
11	24	23.7	22.7	23.3	23.5	23.5	20.9	16.8	14.5
12		20.2	19.6	20.3	20.6	20.6	19.4	15.9	13.7
14		14.6	14.5	15.7	16.1	16.3	16.3	14.5	12.7
16		10.6	10.6	12.1	12.9	13.2	13.3	13.3	11.7
18			7.8	9.2	10.2	10.8	10.9	11	10.6
20			5.6	7	8	8.7	9.1	9.2	9.3
22				5.2	6.2	6.9	7.4	7.8	7.9
24				3.8	4.8	5.5	6	6.4	6.7
26					3.6	4.3	4.8	5.2	5.6
28					2.6	3.3	3.8	4.2	4.6
30					1.7	2.4	2.9	3.4	3.7
32						1.7	2.2	2.6	3
34						1.1	1.6	2	2.3
36							1	1.4	1.7
38								0.9	1.2
40									
42									
Multiplying power	12	10	8	6	5	4	4	3	2
Min. elevation angle of main boom (°)	0	0	0	0	0	5	10	20	28

SISTERMI
Movimentação e Içamento de Cargas

360°operation with fully-extended outrigger and 19.46t counterweight									
Radius (m)	Length of main boom (m)								
	13.5	18.4	23.2	28	32.8	37.6	42.4	47.2	52
3	100	90							
3.5	100	82	70						
4	91.8	75	65.6						
4.5	81.6	70	61.8	51.8					
5	73.4	66	58.4	48.9					
5.5	66.8	62	55.3	46.2	40.8				
6	61.2	58.3	52.6	43.8	38.6				
6.5	56.5	53.8	50	41.6	36.7	33.3			
7	52.5	50	47.2	39.7	35	31.7			
7.5	49	46.6	44.1	37.9	33.3	30.3			
8	45.9	43.7	41.3	36.2	31.9	28.9	26.5		
9	38.8	36.8	35.2	33.2	29.2	26.6	24.3	18.6	
10	32.1	31	29.8	30.2	27	24.5	22.5	17.7	
11	26.9	26.6	25.5	26.1	25	22.7	20.9	16.8	14.5
12		22.9	22.1	22.8	23	21.2	19.4	15.9	13.7
14		17.1	17	17.8	18.1	18.3	17	14.5	12.7
16		13	12.9	14.1	14.6	14.9	15	13.3	11.7
18			9.8	11.2	12	12.3	12.4	12	10.6
20			7.3	8.8	9.8	10.2	10.4	10.5	9.8
22				6.9	7.8	8.5	8.8	9	8.9
24				5.3	6.2	6.9	7.5	7.6	7.8
26					4.9	5.6	6.1	6.5	6.7
28					3.8	4.5	5	5.5	5.8
30					2.9	3.6	4.1	4.5	4.9
32						2.8	3.3	3.7	4
34						2.1	2.6	3	3.3
36							1.9	2.3	2.7
38							1.4	1.8	2.1
40							0.9	1.3	1.6
42								0.9	1.2
Multiplying power	12	10	8	6	5	4	4	3	2
Min. elevation angle of main boom (°)	0	0	0	0	0	0	0	5	10

SISTERMI
Movimentação e Içamento de Cargas

（4）Refer to Table 1.4 for lifting capacity of jib

Table 1.4 Lifting Capacity of Jib of STC1000 Truck Crane

Rear and Side Operation with Fully-extended Outriggers and 8.52t Counterweight						
Elevation angle of main boom	52m Main boom					
	10.7m Jib					
	Jib 0°		Jib 15°		Jib 30°	
	Hoisting weight	Radius（m）	Hoisting weight	Radius（m）	Hoisting weight	Radius（m）
78°	7	10.1	5.2	12.5	3.7	14.8
75°	6.8	13.2	4.5	15.6	3.6	17.8
72°	6.3	16.2	4.2	18.5	3.4	20.6
70°	5.4	18.2	4	20.5	3.3	22.6
65°	4.4	23.1	3.6	25.3	3.1	27.2
60°	2.7	27.9	2.4	30	2.3	31.8
55°	1.5	32.4	1.4	34.4	1.3	36
50°	0.7	36.7	0.7	38.6	0.6	40

Rear and Side Operation with Fully-extended Outriggers and 8.52t Counterweight						
Elevation angle of main boom	52m Main boom					
	18m Jib					
	Jib 0°		Jib 15°		Jib 30°	
	Hoisting weight	Radius（m）	Hoisting weight	Radius（m）	Hoisting weight	Radius（m）
78°	3.8	11.6	2.8	15.8	2.2	19.6
75°	3.4	15.1	2.6	19.3	2.1	22.9
72°	3.2	18.5	2.5	22.6	2	26.1
70°	3	20.7	2.4	24.7	1.9	28.2
65°	2.7	26.2	2.1	30	1.7	33.2
60°	1.9	31.5	1.6	35.1	1.4	38
55°	1	36.6	0.8	40	0.7	42.6
50°	—	—	—	—	—	—

SISTERMI
Movimentação e Içamento de Cargas

Rear and Side Operation with Fully-extended Outriggers and 14.48t Counterweight						
Elevation angle of main boom	52m Main boom					
	10.7m Jib					
	Jib 0°		Jib 15°		Jib 30°	
	Hoisting weight	Radius（m）	Hoisting weight	Radius（m）	Hoisting weight	Radius（m）
78°	7	10.1	5.2	12.5	3.7	14.8
75°	6.8	13.2	4.5	15.6	3.6	17.8
72°	6.3	16.2	4.2	18.5	3.4	20.6
70°	5.4	18.2	4	20.5	3.3	22.6
65°	4.5	23.1	3.6	25.3	3.1	27.2
60°	3.9	27.9	3.3	30	2.9	31.8
55°	2.6	32.4	2.4	34.4	2.2	36
50°	1.6	36.7	1.5	38.6	1.6	40
45°	1	40.7	0.9	42.4	0.9	43.6

Rear and Side Operation with Fully-extended Outriggers and 14.48t Counterweight						
Elevation angle of main boom	52m Main boom					
	18m Jib					
	Jib 0°		Jib 15°		Jib 30°	
	Hoisting weight	Radius（m）	Hoisting weight	Radius（m）	Hoisting weight	Radius（m）
78°	3.8	11.6	2.8	15.8	2.2	19.6
75°	3.4	15.1	2.6	19.3	2.1	22.9
72°	3.2	18.5	2.5	22.6	2	26.1
70°	3	20.7	2.4	24.7	1.9	28.2
65°	2.7	26.2	2.2	30	1.7	33.2
60°	2.4	31.5	1.9	35.1	1.5	38
55°	1.8	36.6	1.6	40	1.4	42.6
50°	1.1	41.4	0.9	44.5	0.9	46.8
45°	—	—	—	—	—	—

SISTERMI
Movimentação e Içamento de Cargas

Rear and Side Operation with Fully-extended Outriggers and 19.46t Counterweight						
Elevation angle of main boom	52m Main boom					
	10.7m Jib					
	Jib 0°		Jib 15°		Jib 30°	
	Hoisting weight	Radius（m）	Hoisting weight	Radius （m）	Hoisting weight	Radius（m）
78°	7	10.1	5.2	12.5	3.7	14.8
75°	6.8	13.2	4.5	15.6	3.6	17.8
72°	6.3	16.2	4.2	18.5	3.4	20.6
70°	5.4	18.2	4	20.5	3.3	22.6
65°	4.5	23.1	3.6	25.3	3.1	27.2
60°	4	27.9	3.3	30	2.9	31.8
55°	3.4	32.4	2.4	34.4	2.3	36
50°	2.4	36.7	2.2	38.6	2.1	40
45°	1.7	40.7	1.6	42.4	1.5	43.6
40°	1.1	44.5	1	46	0.9	47

Rear and Side Operation with Fully-extended Outriggers and 19.46t Counterweight						
Elevation angle of main boom	52m Main boom					
	18m Jib					
	Jib 0°		Jib 15°		Jib 30°	
	Hoisting weight	Radius（m）	Hoisting weight	Radius （m）	Hoisting weight	Radius（m）
78°	3.8	11.6	2.8	15.8	2.2	19.6
75°	3.4	15.1	2.6	19.3	2.1	22.9
72°	3.2	18.5	2.5	22.6	2	26.1
70°	3	20.7	2.4	24.7	1.9	28.2
65°	2.7	26.2	2.2	30	1.7	33.2
60°	2.4	31.5	1.9	35.1	1.5	38
55°	1.9	36.6	1.6	40	1.4	42.6
50°	1.7	41.4	1.5	44.5	1.3	46.8
45°	1.1	45.9	1	48.8	0.9	50.7
40°	—	—	—	—	—	—

SISTERMI
Movimentação e Içamento de Cargas

Caution

① The values in the tables refer to the rated lifting capacity of truck crane that is set horizontally on flat and solid ground. Working radius in the above tables refers to the actual radius after lifting conducting. Working radius of jib represents the actual radius after the lifting conducting with fully-extended main boom (52m) and jib.

② Values in the tables are applicable to all-sided (360°) operation, while hoisting heavy load above the cab should always be avoided to prevent damage to the cab.

③ The values above the thick lines in the tables are based on the strength of truck crane, while those below the thick lines are based on the stability of truck crane. Each section of boom should be fully retracted when boom length reaches 13.5m.

④ The rated lifting capacity in the tables covers the weight of lifting hook and lifting implement, main lifting hook: 1270kg (double-hook) 580kg (single-hook); auxiliary lifting hook: 260kg. Once the jib is fully extended, the rated lifting capacity of main boom shall be reduced by 3000kg.

⑤ Capacity of boom-end single pulley equals to the one from 10.7m jib with 0° installation angle (based on the elevation angle of main boom).

⑥ Once the actual length of boom and reach stay between two values, the lifting capacity should be based on the longer boom and larger radius.

⑦ It is forbidden to descend the boom below the Min. Elevation angles of main boom which correspond to different boom lengths.

⑧ Once main hoisting hook remains on the head of main boom when jib is conducting lifting, the weight of main hoisting hook:1270kg (double-hook), 580kg (single-hook) should be deleted from the rated lifting capacity of jib.

SISTERMI
Movimentação e Içamento de Cargas

(5) The Curve of Lifting Height

The Curve of Lifting Height of STC1000 Truck Crane is as shown in Fig. 1.3. In case of malfunction with moment limiter but in need of urgent working, it is necessary to operate the truck crane according to the lifting conditions indicated in this figure.

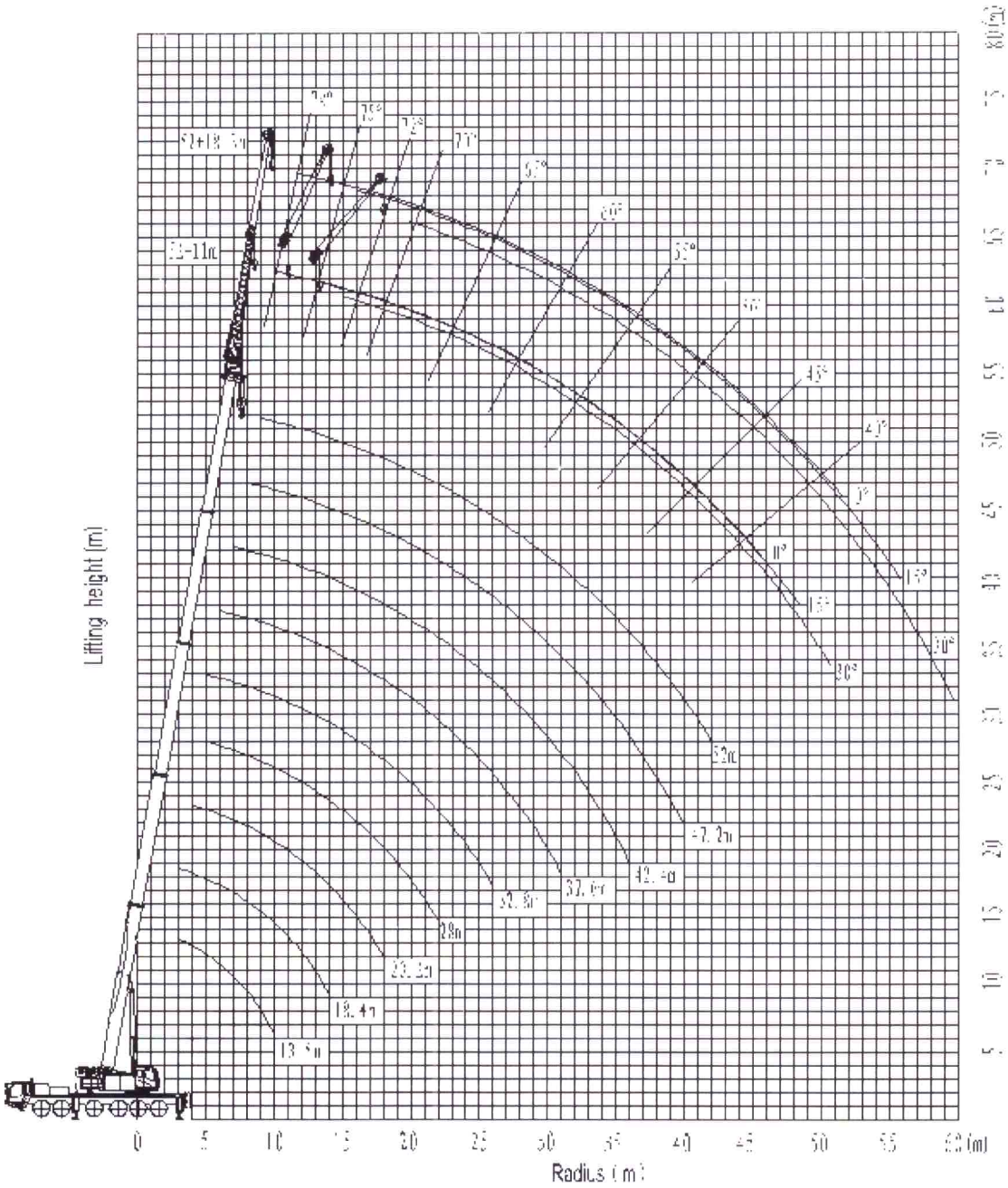

Fig 1.3 Curve of Lifting Height

SISTERMI
Movimentação e Içamento de Cargas

(6) The working area division of truck crane

The working area division of truck crane is as shown in Fig.1.4, which can be referred for the working condition selection and the definitions of relevant terms involved in the following content.

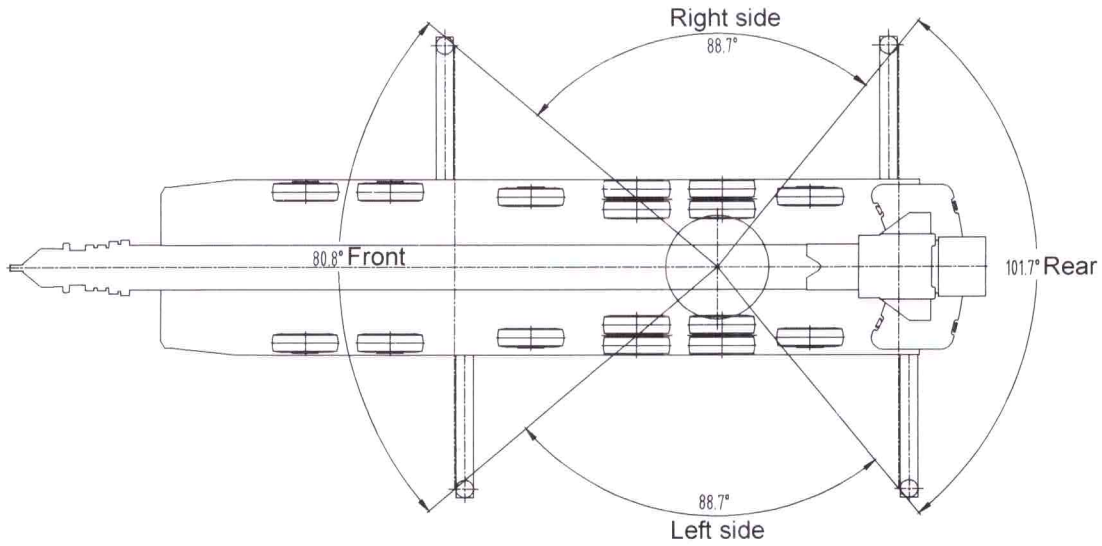

Fig.1.4 Working Area Division of Truck Crane

SISTERMI
Movimentação e Içamento de Cargas

SISTERMI
Movimentação e Içamento de Cargas

Você pode entrar em contato conosco através dos telefones

(27) **3398-1233**

(27) **99690-0505**

(27) **99817-8420**

e no e-mail

comercial@sistermi.com.br